DWG NO 793114

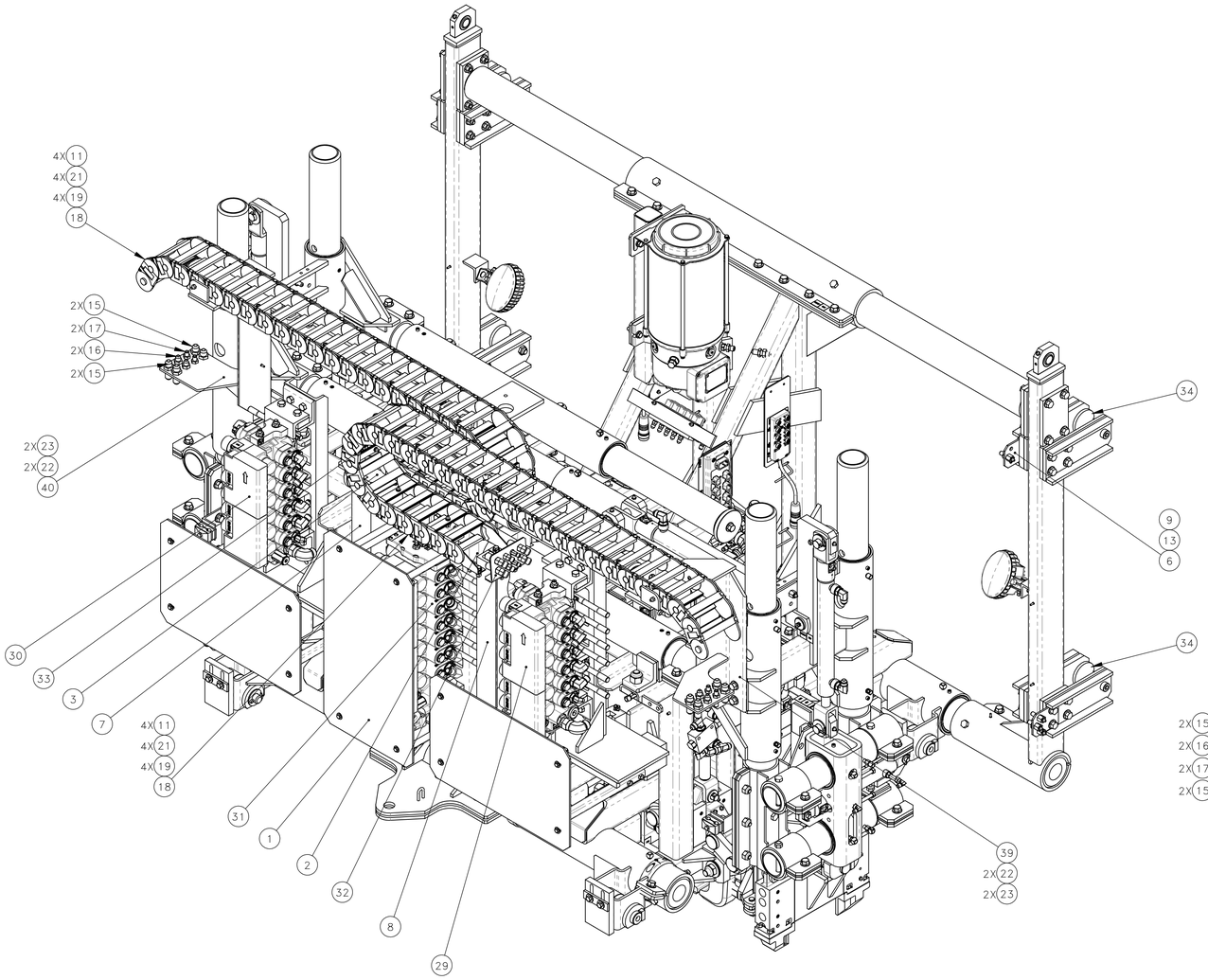

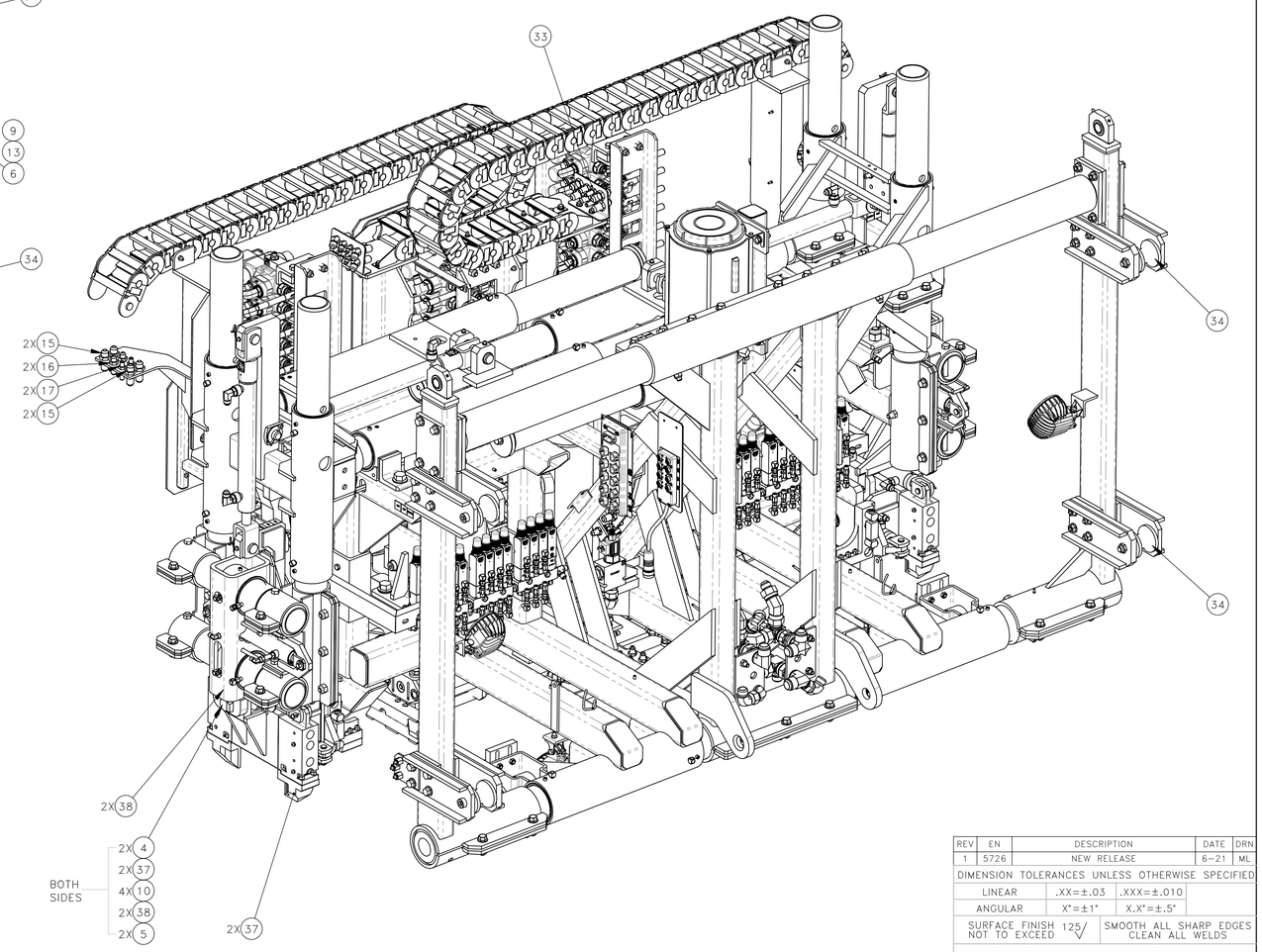

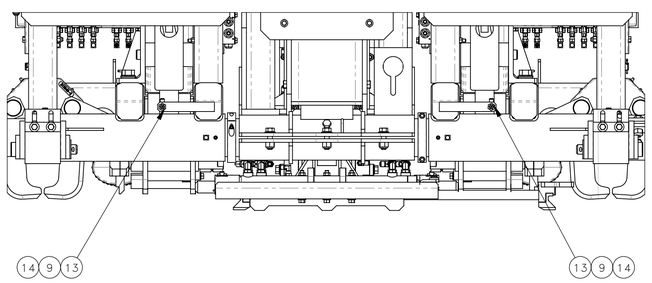

NO.	QTY	DESCRIPTION	PART NO.
26	28	WASHER, FLT: #10	491646
27	14	SCR, SOC BUT: 10-24 X .88	491944
28	1	PLUMBING, WORKHEAD HYDRAULIC	718797
29	1	VALVE, LEFT WORKHEAD	718836
30	1	VALVE, RIGHT WORKHEAD	718837
31	1	VALVE, CENTER WORKHEAD	718842
32	1	BULKHEADS, LEFT	719306
33	1	BULKHEADS, RIGHT	719307
34	4	ROLLER, GUIDE	719850
35	REF	SCHEMATIC, ELECTRIC	720118
36	1	WIRING, WORKHEAD	720119
37	2	CLAMP, PLATE	720136
38	2	GUIDE, FRONT/BACK	720143
39	1	BRACKET, LEFT CARRIER	781566
40	1	BRACKET, RIGHT CARRIER	781567
41	1	INSTRUCTIONS, WORKHEAD RETROFIT KIT	800355
42	4	SCR, SOC BUT: .25-20 X 1.25	25021681

NO.	QTY	DESCRIPTION	PART NO.
1	1	PLATE	319492
2	1	FLAT	319734
3	1	FLAT	319735
4	2	PIN, CLEVIS: 1 X 3.75	322842
5	2	PIN, CLEVIS: 1 X 3.688	322843
6	1	BRACKET, LUBE	397805
7	1	ANGLE	397887
8	1	ANGLE	397890
9	3	FITTING, LUBE: .12 NPT(M)	401987
10	4	PIN, COTTER: .19 X 2	403904
11	8	NUT, HEX ES: .31-18	450578
12	14	NUT, HEX ES: 10-24	456470
13	3	ADAPTER, .12 NPT(F) X #4 JIC(M) BULK	459891
14	2	ELBOW, 90°: #4 JIC(M) X #4 JIC(F)	459906
15	8	UNION, #8 JIC(M) BULK	459928
16	4	UNION, #6 JIC(M) BULK	459929
17	4	UNION, #4 JIC(M) BULK	460155
18	2	CARRIER, CABLE/HOSE	474050
19	8	SCR, HEX FLG: .31-18 X 1	491043
20	4	NUT, HEX ES: .25-20	491232
21	8	WASHER, FLT: .31	491259
22	4	SCR, HEX FLG: .5-13 X 1.5	491484
23	4	NUT, HEX FLG: .5-13	491487
24	4	WASHER, FLT: 1	491551
25	8	WASHER, FLT: 1	491597

REV	EN	DESCRIPTION	DATE	DRN
1	5726	NEW RELEASE	6-21	ML

DIMENSION TOLERANCES UNLESS OTHERWISE SPECIFIED

LINEAR	.XX=±.03	.XXX=±.010
ANGULAR	X°=±1°	X.X°=±.5°

SURFACE FINISH NOT TO EXCEED 125 | SMOOTH ALL SHARP EDGES CLEAN ALL WELDS

THIS PRINT AND ALL INFORMATION WITHIN BELONGS TO RACINE RAILROAD PRODUCTS

RACINE RAILROAD PRODUCTS
RACINE, WISCONSIN USA

DESCRIPTION: KIT WORKHEAD, INSERTER

MATERIAL: SEE BOM

USED ON	SCALE	DATE
932574	1:8	06-18-21

DRN	CHK	APP	JOB NO	SHEET
ML			RD150003	1 OF 1

DWG SIZE	CATALOG	DWG NO
D	K	793114